Go Power! Manual

GP-300 Inverter

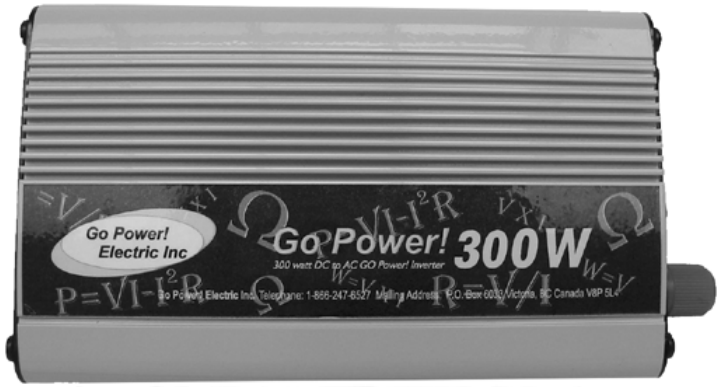

Go Power! Electric Inc.
PO Box 6033
Victoria, BC V8P 5L4
Tel: 866-247-6527
Fax: 866-607-6527
Email: info@gpelectric.com

Table of Contents

1. INTRODUCTION	3
2. SPECIFICATIONS	3
3. FEATURES	4
4. INSTALLATION	5
5. OPERATION	8
6. OPERATING LIMITS	8
7. TROUBLESHOOTING	9
8. MAINTENANCE	10
9. WARRANTY	10

Go Power! Electric Inc.
PO Box 6033
Victoria, BC V8P 5L4
Toll Free Tel: 866-247-6527
Toll Free Fax: 866-607-6527

Email: info@gpelectric.com

Low battery alarm on all the time, LED indicator is red.	Low input voltage.	Make sure that inverter is connected to 12 V battery. Check regulation of charging system.
Low battery alarm on all the time, LED indicator is red.	Poor DC wiring, poor battery condition.	Recharge battery. Use proper cable and make solid connections. Use new battery.

8. Maintenance

Very little maintenance is required to keep your inverter operating properly. You should clean the exterior of the unit periodically with a dry cloth to prevent accumulation of dust and dirt. At the same time, tighten the screws on the DC input terminals.

9. Warranty

We warrant this product against defects in materials and workmanship for a period of 12 months from the date of purchase and will repair or replace any defective Go Power! Inverter when directly returned, postage prepaid, to the manufacturer. This warranty will be considered void if the unit has suffered any obvious physical damage or alteration either internally or externally, and does not cover damage arising from improper use such as plugging the unit into an unsuitable power sources, attempting to operate products with excessive power consumption requirements, reverse polarity, or use in unsuitable climates.

This is the only warranty and the company makes no other warranties, express or implied, including warranties of merchantability and fitness for a particular purpose. Repair or replacement are your sole remedies and shall not be liable for damages, whether direct, incidental, special or consequential, even though caused by negligence or other fault.

1. Introduction

The Go Power! Inverter series provides mobile power for people on the go. Run standard AC appliances wherever you travel. Silent, lightweight and simple to use, Go Power! Inverters can be used in a wide range of applications including remote homes, RVs, boats and long haul trucks. It will operate most televisions and VCR's, personal computers and small appliances including drills, sanders, grinders, mixers, blenders and microwaves. The inverter **must** have a greater power rating than the load to which it is providing power.

To get the most out of your power inverter, it must be installed and used properly. **Please read the instructions in this manual before installing and using your inverter.**

2. Specifications

2.1 GP-300 Inverter	***12 V***
Output	***300 W***
Output wave form	Modified Sine Wave
Output voltage	115 VAC rms
Regulation	+5%-10%
DC input voltage	10-15 V
Low battery alarm ± 2%	10.5 V
Low battery shut-down ± 2%	10.0 V
Efficiency	80-90%
Frequency ±1%	60 Hz
No load current	0.2 A
Surge rating	400 W
Over thermal protection	Yes
Cooling fan	Yes
Overload protection	Yes
Dimensions (LxWxH)	118 x 121 x 51 mm 4.7" x 4.8" x 2.0"
Net weight	0.84 kg 1.8 lbs
Inverter Install Kit	Included

3. Features

3.1 Front view – GP-300

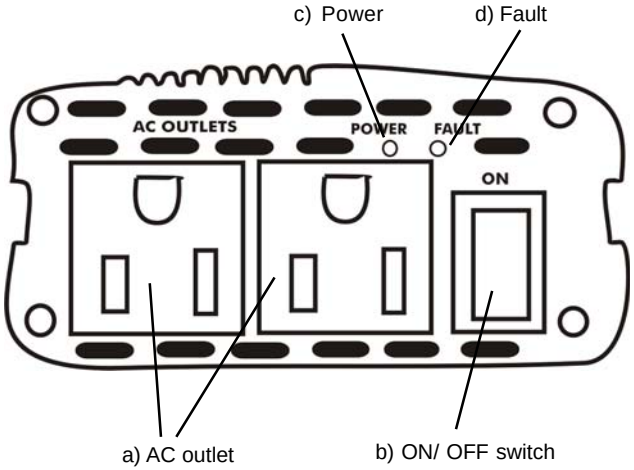

a) AC outlet:
Outlet sockets available: North America

b) ON/ OFF switch:
Leave in the OFF position during installation.

c) Power:
Lights green when GP-300 is on.

d) Fault:
Lights red when fault has occured.

incorporates protection against over voltage, it may still be damaged if the input voltage is allowed to exceed 20 V.

7. Troubleshooting

7.1 Common problems

a) Buzz in audio systems
Some inexpensive stereo systems will emit a buzzing noise from their loud speakers when operated from the power inverter. This is because the power supply in the device does not adequately filter the modified sine wave pro duced by the power inverter. The only solution is to use a sound system that incorporates a higher quality power supply.

b) Television interference
Operation of the power inverter can interfere with television reception on some channels. If this situation occurs, the following steps may help to alleviate the problem.

- Do not operate high power loads with the power inverter while watching television.
- Make sure that the antenna feeding your television provides an adequate ("snow free") signal and that you are using good quality cable between the antenna and the television.
- Move the television as far away from the power inverter as possible.
- Keep the cables between the battery and the power inverter as short as possible and twist them together with about 2 to 3 twists per foot. This minimizes radiated interference from the cables.

7.2 Troubleshooting guide

Problem and Symptoms	Possible Cause	Solution
Low AC output voltage 95-105 VAC.	Using standard voltmeter.	Use true RMS averaging meter.
No output voltage and LED indicator is red.	Overload.	Reduce load.
No output voltage, LED indicator is red.	High input voltage.	Make sure that inverter is connected to 12 V battery. Check regulation of charging system.
No output voltage, no lights.	Car lighter fuse, Inverter lighter cable fuse or interconnect cable fuse open.	Check and replace.

power inverter is now ready to deliver AC power to your loads. If you are operating several loads from the power inverter, turn them on separately after the inverter has been turned ON. This will ensure that the power inverter does not have to deliver the starting currents for all the loads at once.

5.1 Controls and indicators

The ON/OFF switch turns the control circuit in the power inverter ON and OFF. It does not disconnect power from the power inverter.

When the switch is in the OFF position, the power inverter draws no current from the battery. When the switch is in the ON position but with no load, the power idle current is approximately 1 A (see product specifications for exact current draw).

6. Operating limits

6.1 Overtemp

The fault LED will come on when the inverter has shut itself down because the inverter has become overheated. The power inverter may overheat because it has been operated at power levels above it's rating, or because it has been installed in a location, which does not allow it to dissipate heat properly. The power inverter will restart automatically once it has cooled off.

6.2 Overload

The fault LED will come on when the power inverter has shut itself down because its output circuit has been short-circuited or drastically overloaded. Switch the ON/OFF switch to OFF, correct the fault condition, and then switch the ON/OFF switch back to ON.

Some induction motors used in refrigerators, freezers, pumps and other motor operated equipment require very high surge currents to start. The power inverter may not be able to start some of these motors, even though their rated current draw is within the power inverter.

If the motor refuses to start, observe the battery voltage indicator while trying to start the motor. If the battery voltage indicator drops below 11 volts while the inverter is attempting to start the motor, this may be why the motor will not start. Make sure that the battery connections are good and that the battery is fully charged. If the connections are good and the battery is charged, but the voltage still drops below 11 volts, you may need to use a larger battery.

6.3 Input voltage

The power inverter will operate from input voltage ranging 10 V – 15 V. If the voltage drops below 10.7 V, an audible low battery warning will sound and the fault LED will be on. The power inverter will shut down if the input voltage drops below 10 V. This protects your battery from being over discharged.

The power inverter will also shut down if the input voltage exceeds 15 V. This protects the inverter against excessive input voltage. Although the power inverter

3.1 Rear view – GP-300

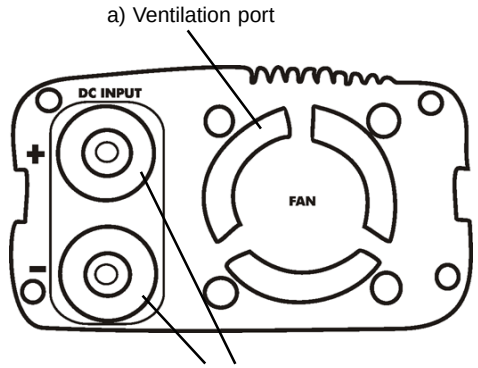

a) Ventilation port:
Do not obstruct, allow at least 1 inch for air flow.

b) Battery terminals: Connect to 12 V battery or other 12 V power source. Note that "+" is positive, "-" is negative. Reverse polarity connection may damage in verter permanently.

Note: Minimum inverter DC cable & DC inverter fuse sizes, see section 4.3 and 4.4.

4. Installation

4.1 Where to install

The power inverter should be installed in a location that meets the following requirements:

Caution! Do not connect this inverter and another AC source (generator or utility power) to the AC wiring or AC loads at the same time. Doing so will destroy the inverter and void the warranty, regardless whether the inverter is switched on or off. If you are using more than one AC source for the AC wiring or AC loads, it is highly recommended that you install an automatic transfer switch (GP-TS), available from Go-Power Electric Inc.

a) Dry - Do not allow water to drip or splash on the inverter.

b) Cool - Ambient air temperature should be between 0°C and 40°C (the cooler the better).

c) Ventilated - Allow at least two inches of clearance around the inverter for air flow. Ensure the ventilation openings on the rear and bottom of the unit are not obstructed.

d) Safe - Do not install the inverter in the same compartment as batteries or in any compartment capable of igniting flammable liquids such as gasoline.

e) Inverter should be located within 10 feet of the batteries.

4.2 Hook-up and testing

To hook-up the inverter please follow these guidelines:

*** Important**: **If you are using the battery interconnect cables supplied with this inverter then please read the following**. The interconnect leads with the alligator clip style DC connections already include a 35 amp fuse. This will be fine for any application 300 watts and under. The DC car lighter input cable includes a 15 Amp fuse. Most North American car lighters are rated between 10 - 15 Amps DC and are fused in the automobile fuse box. Please consult your automobile owners manual for the fuse rating of your lighter It is recommended that you DO NOT exceed a load of 100 watts for a 10 Amp fuse and 140 Watts for a 15 amp fuse when using your car lighter to power this inverter.

1. Unpack and inspect your Go Power! Inverter, check to see that the power switch is in the OFF position.

2. **DC Lighter Plug** - Insert DC input plug into any 12V DC car lighter receptacle and proceed to step 6

3. **Interconnect Cables** -Attach the DC inverter cables to the DC power input terminals on the rear panel of the power inverter. The (+) terminal is positive and (-) terminal is negative. Connect the cables to the terminals by placing the lug connec tor at the base of the terminal and tightening the terminal screw or nut. Clamp the wires securely and ensure connections are tight.

Caution! A reverse polarity connection will blow a fuse in the inverter and may permanently damage the inverter. Damage caused by reverse polarity connection is not covered by our warranty.

4. First connect the cable from the negative terminal of the inverter to the negative terminal of the battery. Make a secure connection.

Caution! Loose connections result in excessive voltage drop and may cause overheated wires and melted insulation. Ensure connections are tight.

5. Before proceeding further, carefully check that the cable you have just con nected is going from the negative terminal of inverter to the negative terminal of the power source (battery).

6. Connect the cable from the positive terminal of inverter to the positive terminal of the battery. Make a secure connection. Check your polarity.

7. Set the power switch to the ON position. Check that the power LED is ON, and if not, check your battery bank and the connections to the inverter.

Warning! You may observe a spark when you make this connection since current may flow to charge capacitors in the power inverter. Do not make this connection in the presence of flammable fumes, as explosion or fire may result.

8. Set the power inverter switch to the OFF position. The power LED light may blink and go dim. The internal alarm may sound momentarily. This is normal. Plug the test load into the AC receptacle on the front panel of the inverter.

9. Set the power inverter switch to the ON position and turn the test load on; the inverter should supply power to the load. If you plan to measure the output voltage of the inverter, a true rms meter must be used for accurate readings.

4.3 Cables

Cables are included with the unit. If user supplied cables are preferred, please use 6 ft or less of #10 Cable with a 35 Amp fuse. Install the inverter fuse into the positive lead. Fuse should be located within 12" of battery. Ensure all connections are tight and secure.

4.4 Inverter fuse example

- GP-300 - 110 amp fuse with 10' #4 cable

5. Operation

To operate the power inverter, turn it on using the ON/OFF switch on the front panel. The

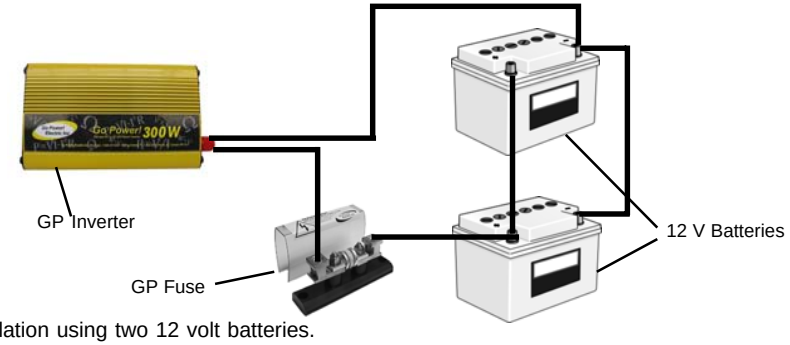

*Installation using two 12 volt batteries.

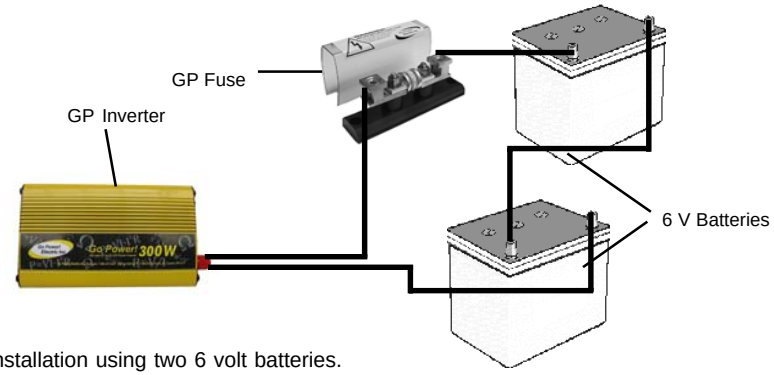

*Installation using two 6 volt batteries.